PROPOSED FIBER HUT
HUT ATL114
FIBER HUT FACILITY DEPLOYMENT PROJECT

PROJECT DESCRIPTION

THIS PROJECT CONSISTS OF THE FOLLOWING INSTALLATION:

- (1) UNMANNED EQUIPMENT SHELTER ON CONCRETE PAD (31.5'X14')
- (1) GENERATOR ON CONCRETE PAD (6'X13')
- (4) FIBER VAULTS (FLUSH WITH GRADE)
- 8' HIGH CHAIN LINK FENCE SURROUNDING COMPOUND WITH 1' BARBED WIRE (50'L X 32'W)
- UTILITIES TO SITE TO INCLUDE:
  - 400A ELECTRICAL SERVICE
  - NATURAL GAS (GENERATOR)
  - TELEPHONE
  - FIBER
- GRAVEL SURFACE WITHIN COMPOUND
- SOIL EROSION SEDIMENT CONTROL AS SHOWN AND AS REQUIRED
- PROPOSED SILT FENCE
- PROPOSED 3' WIDE TRENCHES
- PROPOSED 10' WIDE GRAVEL ACCESS ROAD

PROJECT INFORMATION

APPLICANT ADDRESS:	BECHTEL INFRASTRUCTURE AND POWER CORPORATION 2400 HERODIAN WAY SMYRNA, GA 30080
OWNER:	GOOGLE FIBER GEORGIA, LLC 1600 AMPHITHEATRE PARKWAY MOUNTAIN VIEW, CA 94043
JURISDICTION:	CITY OF SMYRNA
PROPERTY OWNER:	CITY OF SMYRNA
PARCEL:	#17033400010 #17033400110 #17033500030 #17038700010
LATITUDE:	N 33.851662° (NAD 83)
LONGITUDE:	W -84.536382° (NAD 83)

PROJECT CONTACTS

OWNER CONTACT:	SCOTT SIMCOX	678-888-1969
PROJECT MANAGER:	JESS DAWSON	770-779-1849
ENGINEERING CONTACT:	LAURA FLAGG	770-779-1850
PERMITTING CONTACT:	RICK MCPHAIL	770-779-1860
CONSTRUCTION CONTACT:	STEVE HARVEY	770-779-1876
24-HR EMERGENCY CONTACT		866-954-1572

DRAWING INDEX

		REV
H0107-00000-HL-00001	TITLE SHEET	000
H0107-00000-HL-00002	GENERAL NOTES	000
H0107-00000-HL-00003	SITE LAYOUT	000
H0107-00000-HL-00004	GRADING PLAN	000
H0107-00000-HL-00005	COMPOUND LAYOUT	000
H0107-00000-HL-00006	GROUNDING PLAN	000
H0107-00000-HL-00007	DETAILS	000
H0107-00000-HL-00008	DETAILS	000
H0107-00000-HL-00009	POWER RISER BLOCK DIAGRAM	000
H0107-00000-HL-00010	EROSION AND SEDIMENT CONTROL DETAILS	000

VICINITY MAP

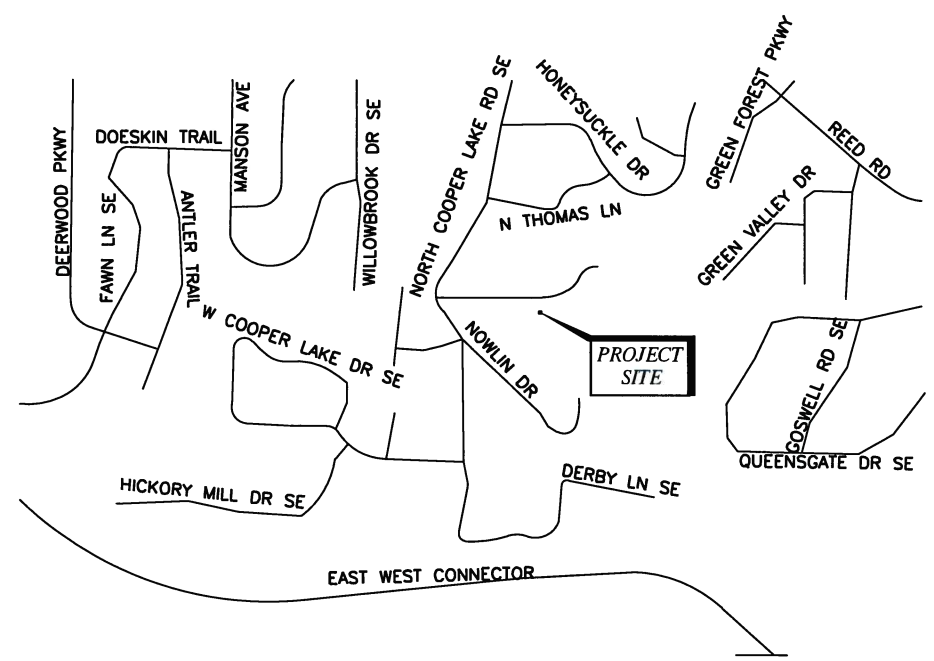

FOR INFORMATION ONLY. DO NOT USE FOR PROCUREMENT, FABRICATION OR CONSTRUCTION.

APPLICABLE BUILDING CODES AND STANDARDS

SUBCONTRACTOR'S WORK SHALL COMPLY WITH ALL APPLICABLE NATIONAL, STATE, AND LOCAL CODES AS ADOPTED BY THE LOCAL AUTHORITY HAVING JURISDICTION (AHJ) FOR THE LOCATION. THE EDITION OF THE AHJ ADOPTED CODES AND STANDARDS IN EFFECT ON THE DATE OF CONTRACT AWARD SHALL GOVERN THE DESIGN.

BUILDING CODE:

IBC INTERNATIONAL BUILDING CODE, 2012 EDITION, WITH 2014 & 2015 GEORGIA AMENDMENTS

ELECTRICAL CODE:

NEC NATIONAL ELECTRICAL CODE, 2014 EDITION, WITH NO AMENDMENTS

MECHANICAL CODE:

IMC INTERNATIONAL MECHANICAL CODE, 2012 EDITION WITH 2014 & 2015 GEORGIA AMENDMENTS

NFPA NATIONAL FIRE PROTECTION ASSOCIATION 101 LIFE SAFETY CODE 2012 EDITION

INTERNATIONAL FIRE CODE, 2012 EDITION, WITH 2014 GEORGIA AMENDMENTS

SUBCONTRACTOR'S WORK SHALL COMPLY WITH THE LATEST EDITION OF THE FOLLOWING STANDARDS:

AMERICAN CONCRETE INSTITUTE (ACI) 318, BUILDING CODE REQUIREMENTS FOR STRUCTURAL CONCRETE 2011

AMERICAN INSTITUTE OF STEEL CONSTRUCTION (AISC), MANUAL OF STEEL CONSTRUCTION 14TH EDITION

INSTITUTE FOR ELECTRICAL AND ELECTRONICS ENGINEERS (IEEE) 81, GUIDE FOR MEASURING EARTH RESISTIVITY, GROUND IMPEDANCE, AND EARTH SURFACE POTENTIALS OF A GROUND SYSTEM 2012 EDITION

IEEE 1100 RECOMMENDED PRACTICE FOR POWERING AND GROUNDING OF ELECTRONIC EQUIPMENT 1999 EDITION

IEEE C2 NATIONAL ELECTRIC SAFETY CODE 2012 EDITION

FOR ANY CONFLICTS BETWEEN SECTIONS OF LISTED CODES AND STANDARDS REGARDING MATERIAL, METHODS OF CONSTRUCTION, OR OTHER REQUIREMENTS, THE MOST RESTRICTIVE REQUIREMENT SHALL GOVERN. WHERE THERE IS CONFLICT BETWEEN A GENERAL REQUIREMENT AND A SPECIFIC REQUIREMENT, THE SPECIFIC REQUIREMENT SHALL GOVERN.

BUILDING INFORMATION:

DESIGN IS FOR A UNMANNED SHELTER WITH THE FOLLOWING SPECIFICATIONS:

- USAGE: UNMANNED SHELTER
- DIMENSIONS: 12' W x 30' L
- CONSTRUCTION TYPE: S-1
- STORIES: 1
- BASIC WIND SPEED: 150 mPH
- FLOOR LOAD: 200 PSF
- ROOF LOAD: 100 PSF
- FLOOR AREA: 360 SF
- BUILDING HEIGHT: 11'-7"

SEISMIC DESIGN: CATEGORY D
WIND EXPOSURE: CATEGORY C

GEORGIA REGISTERED No. PE039564 PROFESSIONAL ENGINEER DENA G. MORGAN
8-14-15

GSWCC LEVEL II CERTIFICATION
#0000073441

BECHTEL INFRASTRUCTURE AND POWER CORPORATION
2400 HERODIAN WAY
SMYRNA, GA 30080
770-779-1855

FIBER HUT
ATL114
NORTH COOPER LAKE PARK
SMYRNA, GA 30082, USA

HUT ATL114

NO.	DATE	REVISIONS	BY	CHK	SUPV	APP'D
00A	08/13/15	ISSUED FOR PERMIT	NTM	SVR	DM	DM

SCALE: AS SHOWN | DESIGNED BY: SB | DRAWN BY: SB

HUT ATL114

TITLE SHEET

DRAWING NUMBER		REV
25927-230	H0114-00000-HL-00101	000

22 x 34 D" SIZE

PSC= : :

Copyright © Bechtel Infrastructure and Power Corporation 2015. This item contains confidential information proprietary to Bechtel that is not to be used, disclosed, or reproduced in any format by any non-Bechtel party without Bechtel's prior written permission. All rights reserved.

GENERAL NOTES

1. FOR THE PURPOSE OF CONSTRUCTION DRAWING, THE FOLLOWING DEFINITIONS SHALL APPLY:
   CONTRACTOR - BECHTEL
   SUBCONTRACTOR - GENERAL CONTRACTOR (CONSTRUCTION)
   OWNER - CONFIDENTIAL
   OEM - ORIGINAL EQUIPMENT MANUFACTURER

2. ALL MATERIALS FURNISHED AND INSTALLED SHALL BE IN STRICT ACCORDANCE WITH ALL APPLICABLE CODES, REGULATIONS, AND ORDINANCES. SUBCONTRACTOR SHALL ISSUE ALL APPROPRIATE NOTICES AND COMPLY WITH ALL LAWS, ORDINANCES, RULES, REGULATIONS, AND LAWFUL ORDERS OF ANY PUBLIC AUTHORITY REGARDING THE PERFORMANCE OF THE WORK. ALL WORK CARRIED OUT SHALL COMPLY WITH ALL APPLICABLE MUNICIPAL AND UTILITY COMPANY SPECIFICATIONS AND LOCAL JURISDICTIONAL CODES, ORDINANCES AND APPLICABLE REGULATIONS.

3. DRAWINGS THAT ARE NOT TO SCALE ARE INTENDED TO SHOW OUTLINE ONLY.

4. UNLESS NOTED OTHERWISE, THE WORK SHALL INCLUDE FURNISHING MATERIALS, APPURTENANCES, AND LABOR NECESSARY TO COMPLETE ALL INSTALLATIONS AS INDICATED ON THE DRAWINGS.

5. THE SUBCONTRACTOR SHALL INSTALL ALL EQUIPMENT AND MATERIALS IN ACCORDANCE WITH MANUFACTURER'S RECOMMENDATIONS UNLESS SPECIFICALLY STATED OTHERWISE.

6. IF THE SPECIFIED EQUIPMENT CANNOT BE INSTALLED AS SHOWN ON THESE DRAWINGS, THE SUBCONTRACTOR SHALL PROPOSE AN ALTERNATIVE INSTALLATION FOR APPROVAL BY THE CONTRACTOR.

7. SUBCONTRACTOR SHALL DETERMINE ACTUAL ROUTING OF CONDUIT, POWER, TELEPHONE AND GROUNDING CABLES AS SHOWN ON THE DRAWINGS.

8. THE SUBCONTRACTOR SHALL PROTECT EXISTING IMPROVEMENTS, PAVEMENTS, CURBS, ETC.
9. SUBCONTRACTOR SHALL PROVIDE TEMPORARY VEGETATIVE COVER WITH FAST GROWING SEEDLINGS (AS APPROVED BY CITY OF ATLANTA) FOR ALL DISTURBED GROUND.

10. SUBCONTRACTOR SHALL LEGALLY AND PROPERLY DISPOSE OF ALL SCRAP MATERIALS.

11. SUBCONTRACTOR SHALL LEAVE PREMISES IN CLEAN CONDITION.

12. HUT COLOR SHALL BE DARK BROWN AGGREGATE.

SITE WORK GENERAL NOTES:

1. THE SUBCONTRACTOR SHALL CONTACT UTILITY LOCATING SERVICES (CALL 811) PRIOR TO THE START OF CONSTRUCTION.

2. ALL EXISTING ACTIVE SEWER, WATER, GAS, ELECTRIC, AND OTHER UTILITIES WHERE ENCOUNTERED IN THE WORK, SHALL BE PROTECTED AT ALL TIMES, AND WHERE REQUIRED FOR THE PROPER EXECUTION OF THE WORK, SHALL BE RELOCATED AS DIRECTED BY CONTRACTOR. EXTREME CAUTION SHOULD BE USED BY THE SUBCONTRACTOR WHEN EXCAVATING OR DRILLING PIERS AROUND OR NEAR UTILITIES.

3. ALL SITE WORK SHALL BE AS INDICATED ON THE DRAWINGS AND PROJECT SPECIFICATIONS.

4. IF NECESSARY, RUBBISH, STUMPS, DEBRIS, STICKS, STONES AND OTHER REFUSE SHALL BE REMOVED FROM THE SITE AND DISPOSED OF LEGALLY.

5. ALL EXISTING INACTIVE SEWER, WATER, GAS, ELECTRIC AND OTHER UTILITIES, WHICH INTERFERE WITH THE EXECUTION OF THE WORK, SHALL BE REMOVED AND/OR CAPPED, PLUGGED OR OTHERWISE DISCONTINUED AT POINTS WHICH WILL NOT INTERFERE WITH THE EXECUTION OF THE WORK, SUBJECT TO THE APPROVAL OF CONTRACTOR, OWNER AND/OR LOCAL UTILITIES.

6. SUBCONTRACTOR SHALL MINIMIZE DISTURBANCE TO EXISTING SITE DURING CONSTRUCTION.

7. THE DISTURBED WORK AREA SHALL BE GRADED TO MATCH CURRENT SITE CONDITIONS AND TO CAUSE SURFACE WATER TO FLOW AWAY FROM THE HUT AND GENERATOR.

8. THE SUB GRADE SHALL BE COMPACTED AND BROUGHT TO A SMOOTH UNIFORM GRADE PRIOR TO FINISHED SURFACE APPLICATION.

9. FOOTING INSPECTION SHALL BE PERFORMED BY QUALIFIED GEOTECHNICAL ENGINEER OR INSPECTOR UPON EXCAVATION OF FOOTING AND PRIOR TO PLACEMENT OF STRUCTURE FILL AND/OR CONCRETE.

10. THE AREAS OF THE OWNER'S PROPERTY DISTURBED BY THE WORK AND NOT COVERED BY THE HUT, EQUIPMENT OR DRIVEWAY, SHALL BE GRADED TO A UNIFORM SLOPE, AND STABILIZED TO PREVENT EROSION AS SPECIFIED IN THE PROJECT SPECIFICATIONS.

11. SUBCONTRACTOR SHALL MINIMIZE DISTURBANCE TO EXISTING SITE DURING CONSTRUCTION. EROSION CONTROL MEASURES, IF REQUIRED DURING CONSTRUCTION, SHALL BE IN CONFORMANCE WITH THE LOCAL GUIDELINES FOR EROSION AND SEDIMENT CONTROL.

12. CONTRACTOR TO DESIGNATE CONCRETE WASHDOWN AREA AS PER DETAIL.

ELECTRICAL INSTALLATION NOTES

1. ALL ELECTRICAL WORK SHALL BE PERFORMED IN ACCORDANCE WITH THE PROJECT SPECIFICATIONS, NEC AND ALL APPLICABLE LOCAL CODES.
2. CONDUIT ROUTINGS ARE SCHEMATIC. SUBCONTRACTOR SHALL INSTALL CONDUITS SO THAT ACCESS TO EQUIPMENT IS NOT BLOCKED.
3. WIRING, RACEWAY AND SUPPORT METHODS AND MATERIALS SHALL COMPLY WITH THE REQUIREMENTS OF THE NEC.
4. ALL CIRCUITS SHALL BE SEGREGATED AND MAINTAIN MINIMUM CABLE SEPARATION AS REQUIRED BY THE NEC.
5. ALL TIE WRAPS SHALL BE CUT FLUSH WITH APPROVED CUTTING TOOL TO REMOVE SHARP EDGES.
6. POWER, CONTROL, AND EQUIPMENT GROUND WIRING IN TUBING OR CONDUIT SHALL BE SINGLE CONDUCTOR (#14 AWG OR LARGER), 600 V, OIL RESISTANT THHN OR THWN-2, CLASS B STRANDED COPPER CABLE RATED FOR 90 °C (WET AND DRY) OPERATION; LISTED OR LABELED FOR THE LOCATION AND RACEWAY SYSTEM USED, UNLESS OTHERWISE SPECIFIED.
7. POWER AND CONTROL WIRING, NOT IN TUBING OR CONDUIT, SHALL BE MULTI-CONDUCTOR, TYPE TC CABLE (#14 AWG OR LARGER), 600 V, OIL RESISTANT THHN OR THWN-2, CLASS B STRANDED COPPER CABLE RATED FOR 90 °C (WET AND DRY) OPERATION; WITH OUTER JACKET; LISTED OR LABELED FOR THE LOCATION USED, UNLESS OTHERWISE SPECIFIED.
8. ALL POWER AND POWER GROUNDING CONNECTIONS SHALL BE CRIMP-STYLE, COMPRESSION WIRE LUGS AND WIRENUTS BY THOMAS AND BETTS (OR EQUAL). LUGS AND WIRE NUTS SHALL BE RATED FOR OPERATION AT NO LESS THAN 75°C (90°C IF AVAILABLE).
9. RACEWAY AND CABLE TRAY SHALL BE LISTED OR LABELED FOR ELECTRICAL USE IN ACCORDANCE WITH NEMA, UL, ANSI/IEEE, AND NEC.
10. ELECTRICAL METALLIC TUBING (EMT) OR RIGID NONMETALLIC CONDUIT (I.E., RIGID PVC SCHEDULE 40, OR RIGID PVC SCHEDULE 80 FOR LOCATIONS SUBJECT TO PHYSICAL DAMAGE) SHALL BE USED FOR EXPOSED INDOOR LOCATIONS.
11. ELECTRICAL METALLIC TUBING (EMT), ELECTRICAL NONMETALLIC TUBING (ENT), OR RIGID NONMETALLIC CONDUIT (RIGID PVC, SCHEDULE 40) SHALL BE USED FOR CONCEALED INDOOR LOCATIONS.
12. GALVANIZED STEEL INTERMEDIATE METALLIC CONDUIT (IMC) SHALL BE USED FOR OUTDOOR LOCATIONS ABOVE GRADE.
13. RIGID NONMETALLIC CONDUIT (I.E., RIGID PVC SCHEDULE 40 OR RIGID PVC SCHEDULE 80) SHALL BE USED UNDERGROUND; DIRECT BURIED, IN AREAS OF OCCASIONAL LIGHT VEHICLE TRAFFIC OR ENCASED IN REINFORCED CONCRETE IN AREAS OF HEAVY VEHICLE TRAFFIC.
14. LIQUID-TIGHT FLEXIBLE METALLIC CONDUIT (LIQUID-TITE FLEX) SHALL BE USED INDOORS AND OUTDOORS, WHERE VIBRATION OCCURS OR FLEXIBILITY IS NEEDED.
15. CONDUIT AND TUBING FITTINGS SHALL BE THREADED OR COMPRESSION-TYPE AND APPROVED FOR THE LOCATION USED. SETSCREW FITTINGS ARE NOT ACCEPTABLE.
16. CABINETS, BOXES, AND WIREWAYS SHALL BE LISTED OR LABELED FOR ELECTRICAL USE IN ACCORDANCE WITH NEMA, UL, ANSI/IEEE, AND NEC.
17. EQUIPMENT CABINETS, TERMINAL BOXES, JUNCTION BOXES, AND PULL BOXES SHALL BE GALVANIZED OR EPOXY-COATED SHEET STEEL, SHALL MEET OR EXCEED UL 50, AND RATED NEMA 1 (OR BETTER) INDOORS, OR NEMA 3R (OR BETTER) OUTDOORS
18. METAL RECEPTACLE, SWITCH, AND DEVICE BOXES SHALL BE GALVANIZED, EPOXY-COATED, OR NON-CORRODING; SHALL MEET OR EXCEED UL 514A AND NEMA OS 1; AND RATED NEMA 1 (OR BETTER) INDOORS, OR WEATHER PROTECTED (WP OR BETTER) OUTDOORS.
19. NONMETALLIC RECEPTACLE, SWITCH, AND DEVICE BOXES SHALL MEET OR EXCEED NEMA OS 2; AND RATED NEMA 1 (OR BETTER) INDOORS, OR WEATHER PROTECTED (WP OR BETTER) OUTDOORS.
20. THE SUBCONTRACTOR SHALL PROVIDE NECESSARY TAGGING ON THE BREAKERS, CABLES AND DISTRIBUTION PANELS IN ACCORDANCE WITH THE APPLICABLE CODES AND STANDARDS TO SAFEGUARD AGAINST LIFE AND PROPERTY.

GROUNDING NOTES

1. ALL GROUND ELECTRODE SYSTEMS (INCLUDING TELECOMMUNICATION, RADIO, LIGHTNING PROTECTION, AND AC POWER GES'S) SHALL BE BONDED TOGETHER, AT OR BELOW GRADE, BY TWO OR MORE COPPER BONDING CONDUCTORS IN ACCORDANCE WITH THE NEC.

2. THE SUBCONTRACTOR SHALL PERFORM IEEE FALL-OF-POTENTIAL RESISTANCE TO EARTH TESTING (PER IEEE 1100 AND 81) FOR NEW GROUND ELECTRODE SYSTEMS. THE SUBCONTRACTOR SHALL FURNISH AND INSTALL SUPPLEMENTAL GROUND ELECTRODES AS NEEDED TO ACHIEVE A TEST RESULT OF 25 OHMS OR LESS.

3. EXOTHERMIC WELDS SHALL BE USED FOR ALL GROUNDING CONNECTIONS BELOW GRADE.

4. APPROVED ANTIOXIDANT COATINGS (I.E., CONDUCTIVE GEL OR PASTE) SHALL BE USED ON ALL COMPRESSION AND BOLTED GROUND CONNECTIONS.

5. ALUMINUM CONDUCTOR OR COPPER CLAD STEEL CONDUCTOR SHALL NOT BE USED FOR GROUNDING CONNECTIONS.

6. MISCELLANEOUS ELECTRICAL AND NON-ELECTRICAL METAL BOXES, FRAMES AND SUPPORTS SHALL BE BONDED TO THE GROUND RING, IN ACCORDANCE WITH THE NEC.

7. METAL CONDUIT AND TRAY SHALL BE GROUNDED AND MADE ELECTRICALLY CONTINUOUS WITH LISTED BONDING FITTINGS OR BY BONDING ACROSS THE DISCONTINUITY WITH 6 AWG COPPER WIRE UL APPROVED GROUNDING TYPE CONDUIT CLAMPS.

8. GROUND CONDUCTORS USED IN THE FACILITY GROUND AND LIGHTNING PROTECTION SYSTEMS SHALL NOT BE ROUTED THROUGH METALLIC OBJECTS THAT FORM A RING AROUND THE CONDUCTOR, SUCH AS METALLIC CONDUITS, METAL SUPPORT CLIPS OR SLEEVES THROUGH WALLS OR FLOORS. WHEN IT IS REQUIRED TO BE HOUSED IN CONDUIT TO MEET CODE REQUIREMENTS OR LOCAL CONDITIONS, NON-METALLIC MATERIAL SUCH AS PVC PLASTIC CONDUIT SHALL BE USED. WHERE USE OF METAL CONDUIT IS UNAVOIDABLE (E.G., NON-METALLIC CONDUIT PROHIBITED BY LOCAL CODE) THE GROUND CONDUCTOR SHALL BE BONDED TO EACH END OF THE METAL CONDUIT.

GEORGIA REGISTERED No. PE039564 PROFESSIONAL ENGINEER DENA G. MORGAN
8-14-15

BECHTEL INFRASTRUCTURE AND POWER CORPORATION
2400 HERODIAN WAY
SMYRNA, GA 30080
770-779-1855

FIBER HUT
ATL114
NORTH COOPER LAKE PARK
SMYRNA, GA 30082, USA

HUT ATL114

NO.	DATE	REVISIONS	BY	CHK	SUPV	APP'D
00A	08/13/15	ISSUED FOR PERMIT	NTM	SVR	DM	DM

SCALE: AS SHOWN | DESIGNED BY: SB | DRAWN BY: SB

HUT ATL114

GENERAL NOTES

DRAWING NUMBER		REV
25927-230	H0114-00000-HL-00102	000

22 x 34 "D" SIZE

PSC= : :

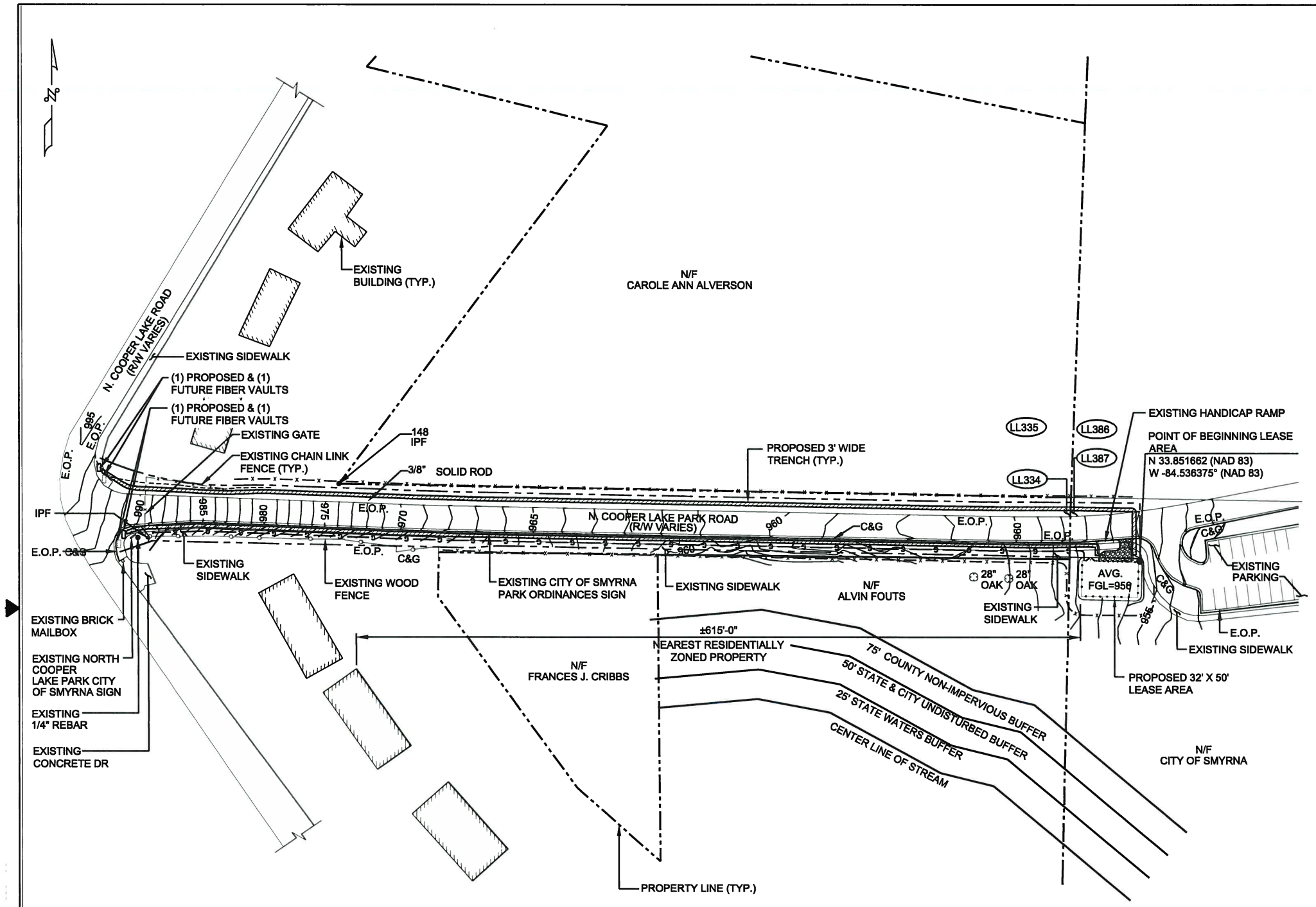

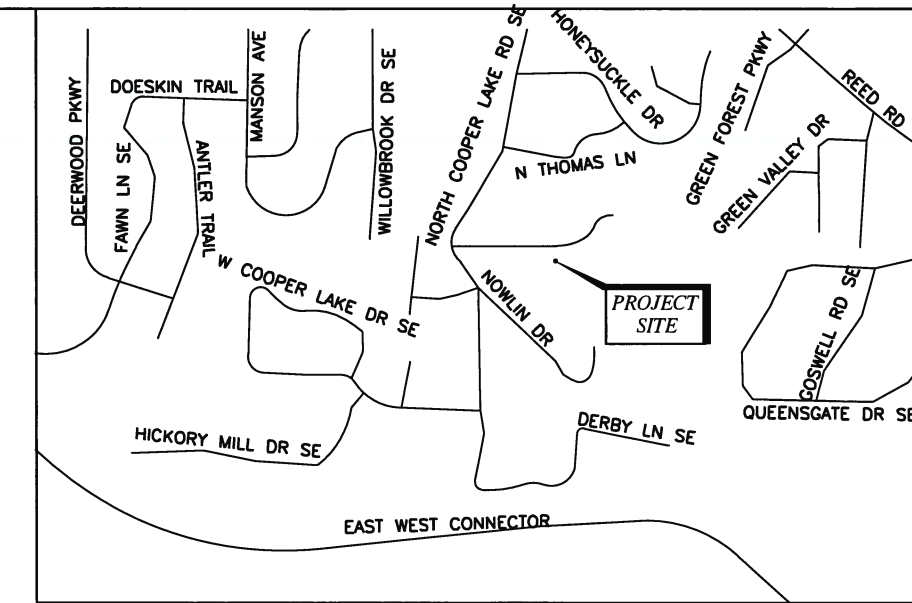

LEGEND

EXISTING CONTOUR	
RETAINED CONTOUR	
PROPOSED CONTOUR	
NATURAL GAS	G G
SILT FENCE	X X X X
NON-EXCLUSIVE UTILITY EASEMENT	

NOTE:-

- CITY ARBORIST WILL NEED TO BE CONSULTED PRIOR TO TREE REMOVAL.
- ANY EXISTING TREES REQUIRE REMOVAL SHALL BE REPLACED WITH SIMILAR CALIPER (DIAMETER) TREES AS REQUIRED LOCATION TO BE DETERMINED IN COORDINATION WITH CITY.

Know what's below. Call before you dig.

FULL SCALE 1"=50'-0"
50 25 0 50 100 FT
HALF SCALE 1"=100'-0"

SITE LAYOUT 1/103

GEORGIA REGISTERED No. PE039564 PROFESSIONAL ENGINEER DENA G. MORGAN
8-14-15

BECHTEL INFRASTRUCTURE AND POWER CORPORATION
2400 HERODIAN WAY
SMYRNA, GA 30080
770-779-1855

FIBER HUT
ATL114
NORTH COOPER LAKE PARK
SMYRNA, GA 30082, USA

HUT ATL114

NO.	DATE	REVISIONS	BY	CHK	SUPV	APP'D
00A	08/13/15	ISSUED FOR PERMIT	NTM	SVR	DM	DM

SCALE: AS SHOWN DESIGNED BY: SB DRAWN BY: SB

HUT ATL114
SITE LAYOUT

DRAWING NUMBER		REV
25927-230	H0114-00000-HL-00103	000

22 x 34 "D" SIZE
PSC= : :

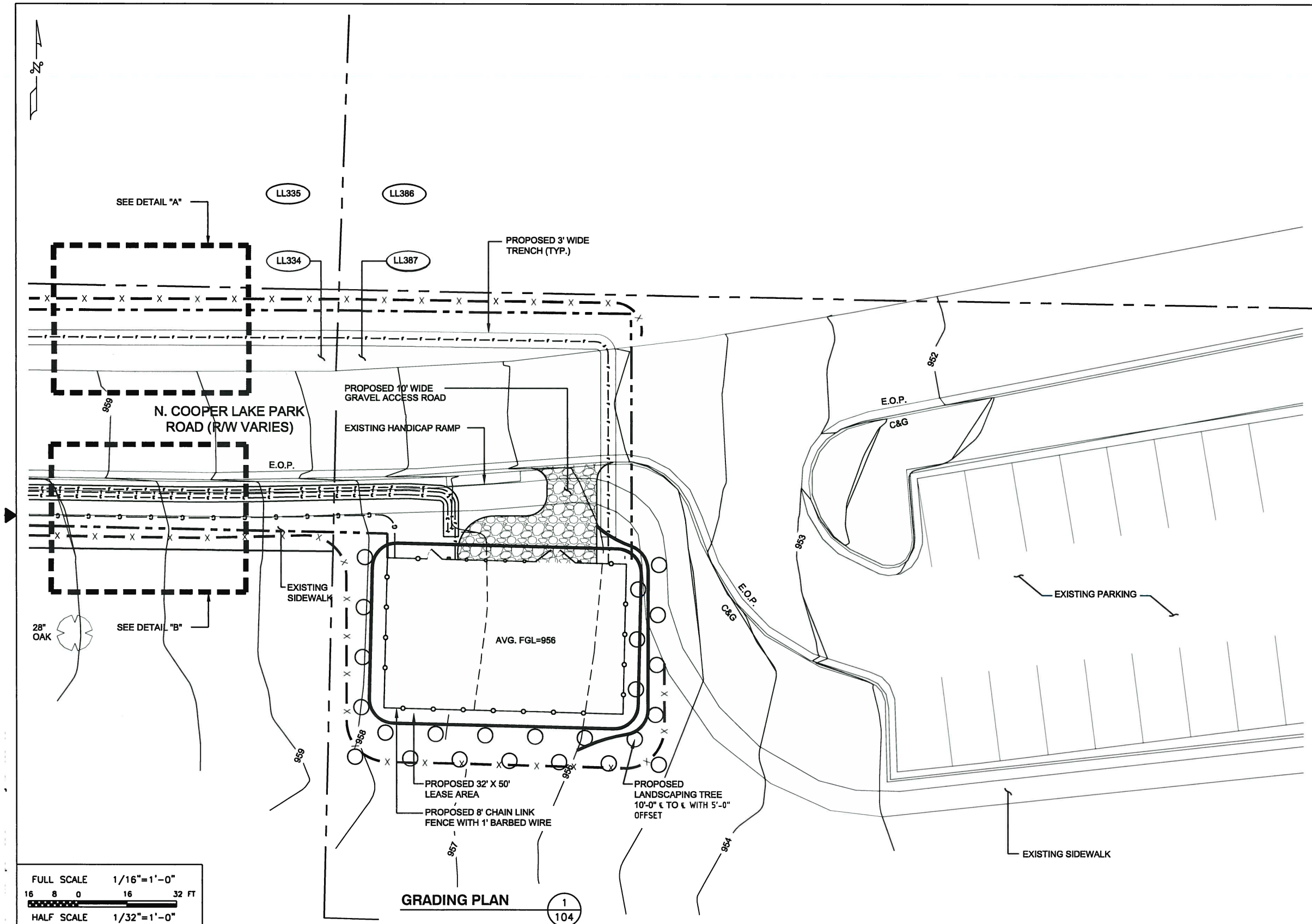

GRADING PLAN 1/104

LEGEND	
EXISTING CONTOUR	
RETAINED CONTOUR	
PROPOSED CONTOUR	
FIBER	F F
ELECTRIC	E E
TELCO	T T
NATURAL GAS	G G G
PROPOSED SILT FENCE	
NON-EXCLUSIVE UTILITY EASEMENT	

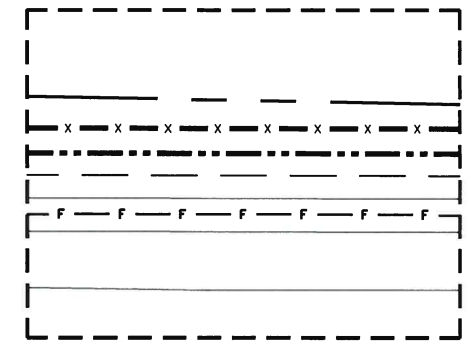

DETAIL "A" 2/104

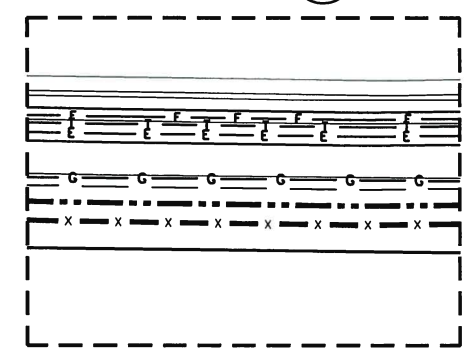

DETAIL "B" 3/104

FULL SCALE 1/16"=1'-0"
16 8 0 16 32 FT
HALF SCALE 1/32"=1'-0"

GEORGIA REGISTERED No. PE039564 PROFESSIONAL ENGINEER DENA G. MORGAN
8-14-15

BECHTEL INFRASTRUCTURE AND POWER CORPORATION
2400 HERODIAN WAY
SMYRNA, GA 30080
770-779-1855

FIBER HUT
ATL114
NORTH COOPER LAKE PARK
SMYRNA, GA 30082, USA

HUT ATL114

NO.	DATE	REVISIONS	BY	CHK	SUPV	APP'D
00A	08/13/15	ISSUED FOR PERMIT	NTM	SVR	DM	DM

SCALE: AS SHOWN DESIGNED BY: SB DRAWN BY: SB

HUT ATL114
GRADING PLAN

DRAWING NUMBER		REV
25927-230	H0114-00000-HL-00104	000

22 x 34 "D" SIZE
PSC= : :

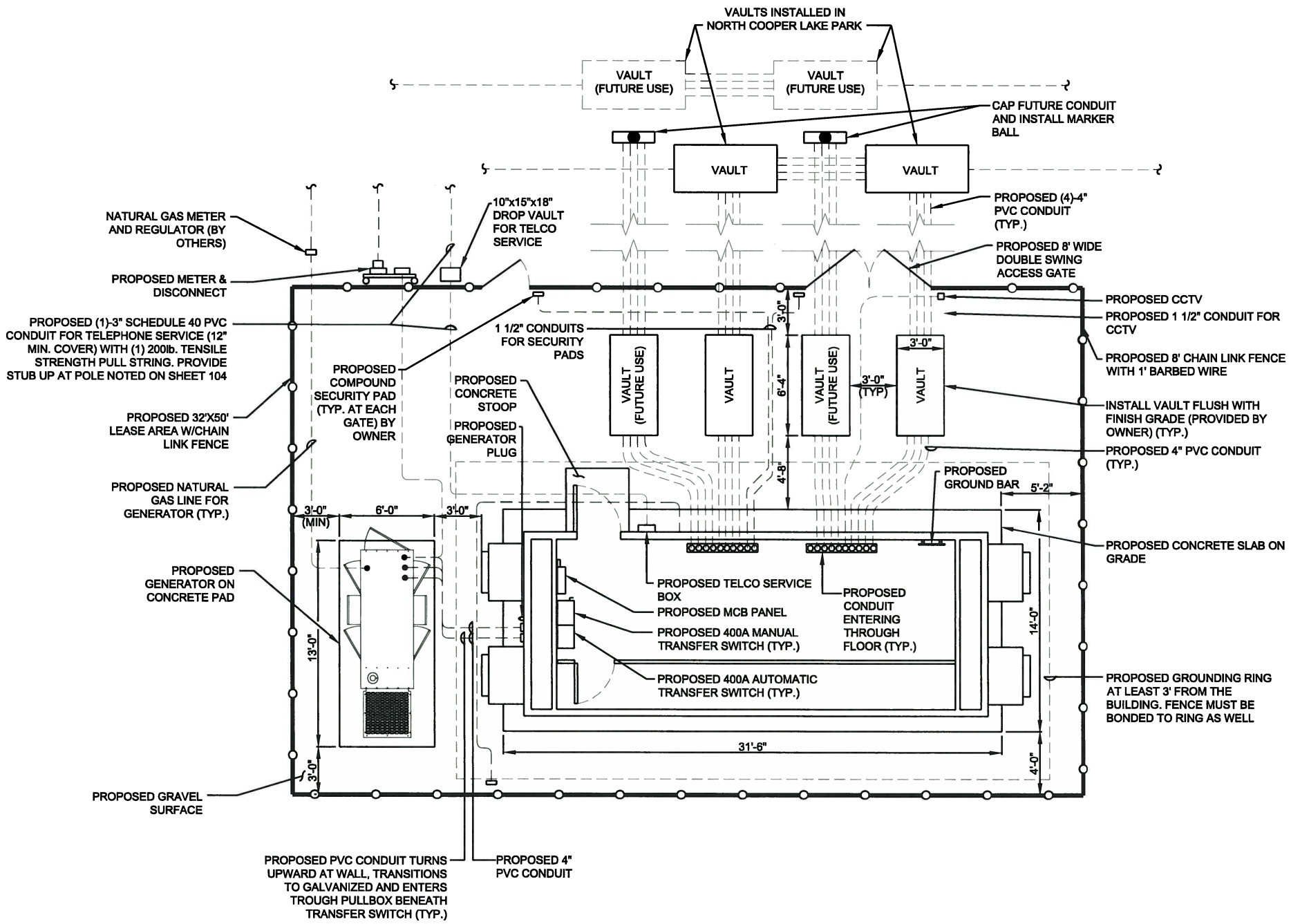

FULL SCALE 1/4"= 1'-0"

4 0 4 8 FT

HALF SCALE 1/8"=1'-0"

COMPOUND LAYOUT 1/105

BUILDING INFORMATION:

1. ELECTRICAL SERVICE IS 400 AMP, 120/240 VOLT, SINGLE PHASE.
2. ALL ITEMS MARKED "FUTURE" ARE TO BE IMPLEMENTED LATER AT A YET UNDETERMINED TIME. THESE ITEMS MARKED "FUTURE" MAY OR MAY NOT BE IMPLEMENTED AND ARE SHOWN ONLY FOR REFERENCE.

CONSTRUCTION NOTES:

1. SUBCONTRACTOR SHALL FIELD VERIFY SCOPE OF WORK, NEW UNMANNED SHELTER LOCATION AND CONCRETE PAD TO BE INSTALLED.
2. SUBCONTRACTOR SHALL COORDINATE WORK AND PROCEDURES WITH CONTRACTOR.
3. ALL GRAVEL SURFACE IN AREAS OF THE SITE THAT WERE DISTURBED DURING CONSTRUCTION SHALL BE REPLACED TO ITS ORIGINAL CONDITION BY SUBCONTRACTOR.
4. THE FIBER CONDUITS ENTERING AND EXITING THE HUT FOLLOW THE EAST–WEST ROUTE. THAT IS THE FIBER WILL COME IN ONE SIDE OF THE HUT AND EXIT ON THE OTHER SIDE. FIBER WILL NOT BE IN THE SAME TRENCH AT ANY TIME TO MAINTAIN TRUE DIVERSITY.
5. TOP ELEVATION OF PROPOSED NEW SLAB SHALL BE A MINIMUM OF 2 INCHES ABOVE EXISTING GRADE.
6. SUBCONTRACTOR SHALL INSTALL FOUNDATION IN ACCORDANCE WITH ALL SHELTER MANUFACTURER'S INSTALLATION DOCUMENTS. ANY CONFLICTS OF CONSTRUCTION DOCUMENTS WITH SHELTER MANUFACTURER RECOMMENDATIONS SHALL BE REPORTED TO THE CONTRACTOR FOR RESOLUTION PRIOR TO INSTALLATION.
7. ROUTING OF PROPOSED CONDUITS ARE SHOWN DIAGRAMMATICALLY. SUBCONTRACTOR SHALL DETERMINE EXISTENCE OF INTERFERENCES AND ALL UNDERGROUND UTILITIES.
8. SUBCONTRACTOR TO INSTALL ROW VAULTS AND ALL ASSOCIATED CONDUITS.

GEORGIA REGISTERED No. PE039564 PROFESSIONAL ENGINEER DENA G. MORGAN 8-14-15

BECHTEL INFRASTRUCTURE AND POWER CORPORATION
2400 HERODIAN WAY
SMYRNA, GA 30080
770-779-1855

FIBER HUT
ATL114
NORTH COOPER LAKE PARK
SMYRNA, GA 30082, USA

HUT ATL114

NO.	DATE	REVISIONS	BY	CHK	SUPV	APP'D
00A	08/13/15	ISSUED FOR PERMIT	NTM	SVR	DM	DM

SCALE: AS SHOWN | DESIGNED BY: SB | DRAWN BY: SB

HUT ATL114

COMPOUND LAYOUT

DRAWING NUMBER		REV
25927-230	H0114-00000-HL-00105	000

22 x 34 "D" SIZE

PSC= : :

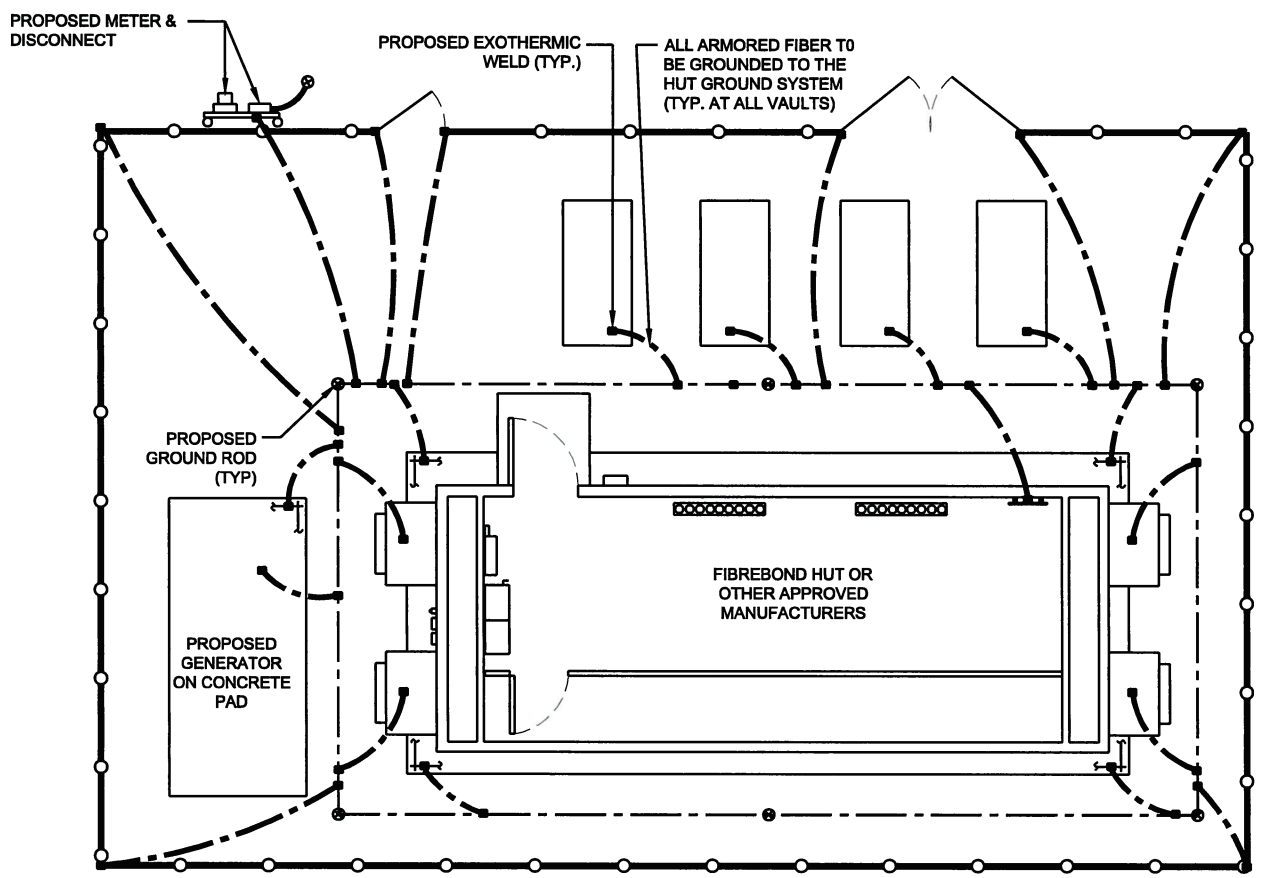

FULL SCALE 1/4"= 1'-0"

4 0 4 8 FT

HALF SCALE 1/8"=1'-0"

COMPOUND LAYOUT 1/106

NOTES

1. ALL ELECTRICAL WORK SHALL BE PERFORMED IN ACCORDANCE WITH PROJECT SPECIFICATIONS AND ALL APPLICABLE LOCAL CODES SEE PAGE 0001 FOR DETAILS.
2. THE CONTRACTOR IS RESPONSIBLE FOR PROPERLY SEQUENCING GROUNDING AND UNDERGROUND CONDUIT INSTALLATION AS TO PREVENT ANY LOSS OF CONTINUITY IN THE GROUNDING SYSTEM OR DAMAGE TO THE CONDUIT.
3. COMPRESSION GROUND CONNECTIONS ABOVE GRADE MAY BE REPLACED BY EXOTHERMIC CONNECTIONS.
4. A METER BASES SHALL BE INSTALLED AT THE LOCATION APPROVED BY THE UTILITY. CONSULT UTILITY COMPANY FOR METER BASE SPECIFICATIONS.
5. FOR COMPLETE INTERNAL WIRING AND ARRANGEMENT REFER TO VENDOR PRINTS PROVIDED BY SHELTER MANUFACTURER.
6. ALL EQUIPMENT AND INTERIOR GROUNDING SHALL BE INSTALLED AT THE SHELTER MANUFACTURING FACILITY.
7. FENCE & GATES TO BE GROUNDED AS PER DETAIL.

ELECTRICAL SYMBOLS

- ● COMPRESSION TYPE CONNECTION
- — — — GROUNDING WIRE – 2 AWG BCW TINNED SOLID
- (XXX/XX) — REPRESENTS DETAIL NUMBER / REF. SHEET NUMBER OR STANDARD DETAIL
- ⊗ GROUND ROD
- ■ EXOTHERMIC CADWELD

ABBREVIATIONS

AWG	AMERICAN WIRE GAUGE
BCW	BARE COPPER WIRE
DWG	DRAWING
EMT	ELECTRICAL METALLIC TUBING
GEN	GENERATOR
IGR	INTERIOR GROUND RING (HALO)
MGB	MASTER GROUND BAR
RGS	RIGID GALVANIZED STEEL
RWY	RACEWAY
TYP.	TYPICAL

GEORGIA REGISTERED No. PE039564 PROFESSIONAL ENGINEER DENA G. MORGAN

8-14-15

BECHTEL INFRASTRUCTURE AND POWER CORPORATION
2400 HERODIAN WAY
SMYRNA, GA 30080
770-779-1855

FIBER HUT
ATL114
NORTH COOPER LAKE PARK
SMYRNA, GA 30082, USA

HUT ATL114

NO.	DATE	REVISIONS	BY	CHK	SUPV	APP'D
00A	08/13/15	ISSUED FOR PERMIT	NTM	SVR	DM	DM

SCALE: AS SHOWN | DESIGNED BY: SB | DRAWN BY: SB

HUT ATL114

COMPOUND LAYOUT

DRAWING NUMBER		REV
25927-230	H0114-00000-HL-00106	000

22 x 34 "D" SIZE

PSC= : :

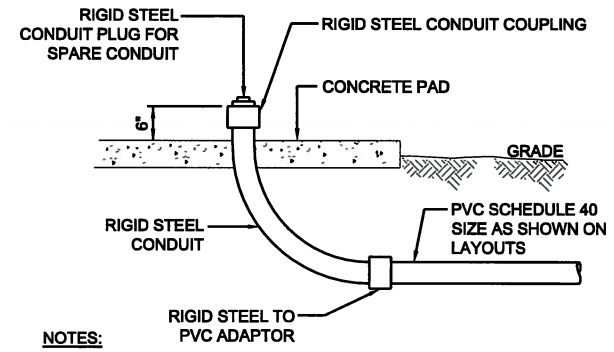

NOTES:

1. PVC ELBOW MAY BE USED AS AN ALTERNATIVE TO STEEL ELBOW WHERE THE STUB-UP IS THROUGH CONCRETE, NOT SUBJECT TO PHYSICAL DAMAGE AND PULLING TENSION WILL CAUSE DAMAGE TO THE ELBOW OR CONDUCTORS. IF PVC ELBOW IS USED INSTALL PVC FEMALE CONNECTOR AND PLUG.
2. BEND RADIUS SHALL NOT BE LESS THAN REQUIRED BY NEC.

UNDERGROUND CONDUIT STUB-UP DETAIL

DETAIL 1 / – NTS

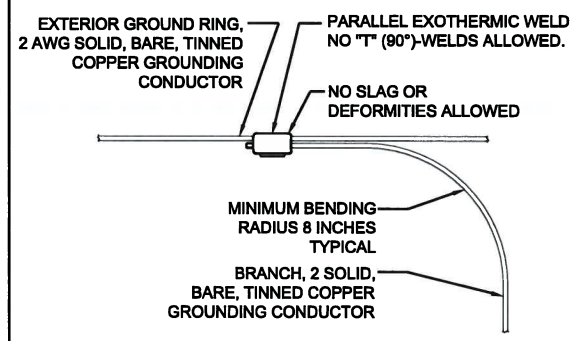

TYPICAL GROUNDING CONNECTION DETAIL

DETAIL 2 / – NTS

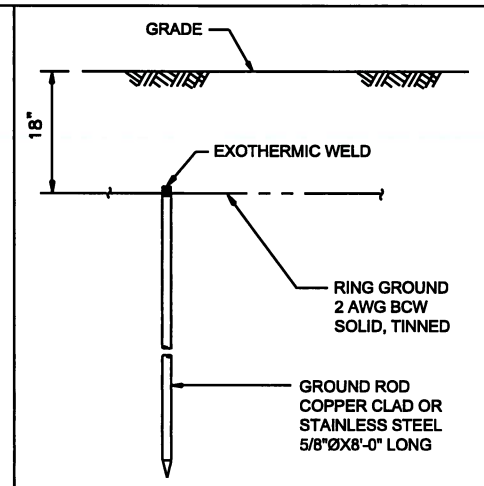

GROUND ROD DETAIL

DETAIL 4 / – NTS

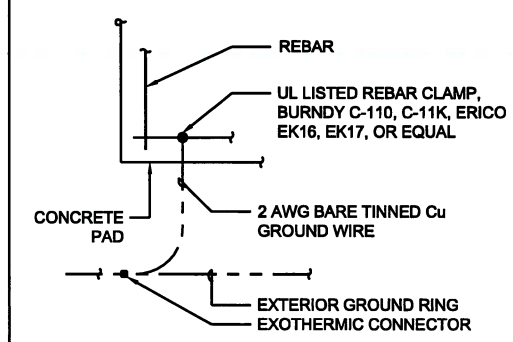

TYPICAL GROUNDING CONNECTION DETAIL FOR REBAR

DETAIL 7 / – NTS

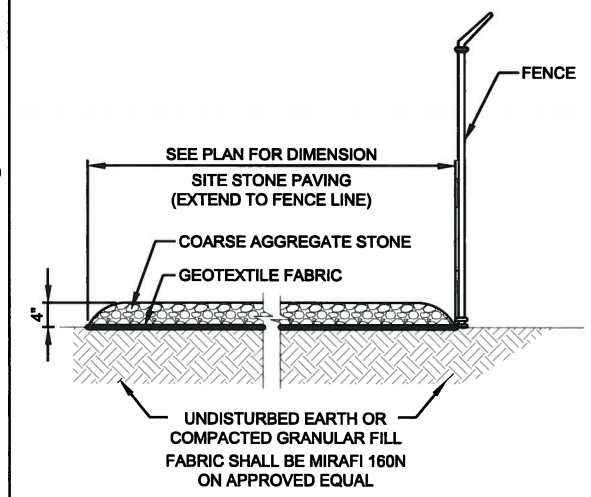

GRAVEL SURFACING

DETAIL 8 / – NTS

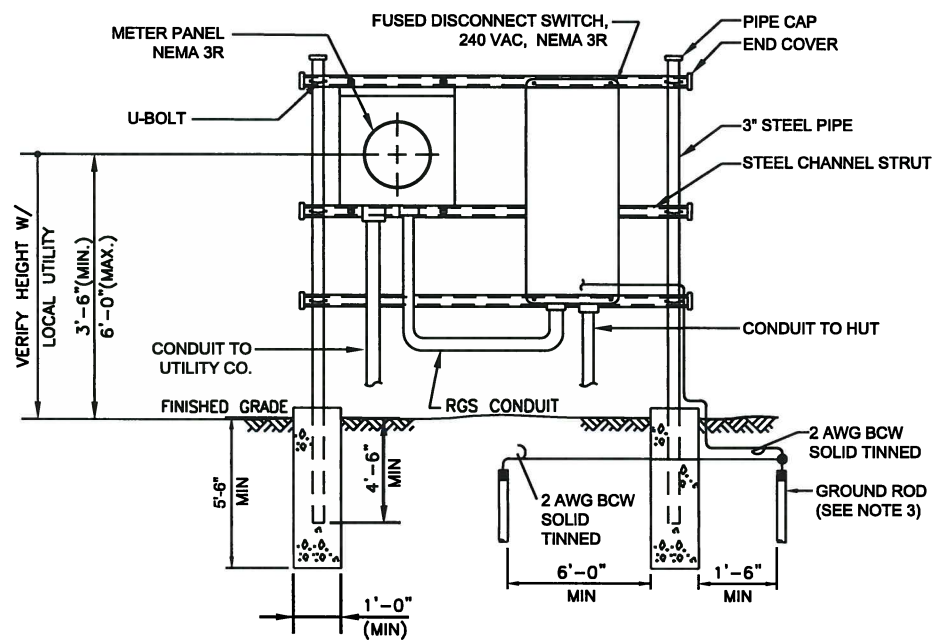

NOTES:

1. METER BASE AND DISCONNECT SWITCH ACCEPTABILITY SHALL BE COORDINATED WITH LOCAL UTILITY PRIOR TO ORDERING. METER BASE SHALL INCLUDE ACCESSORIES AND MOUNTING BRACKETS SUITABLE FOR OUTDOOR INSTALLATION.
2. FUSED DISCONNECT SWITCH MAY BE REPLACED BY CIRCUIT BREAKER SUITABLE FOR OUTDOOR INSTALLATION.
3. CONNECT NEUTRAL TERMINAL IN DISCONNECTING DEVICE TO GROUND ROD.
4. ALL WORK SHALL BE PERFORMED PER REQUIREMENTS OF UTILITY AND SITE OWNER.

DISCONNECT AND METER PANEL SUPPORT DETAIL

DETAIL 3 / – NTS

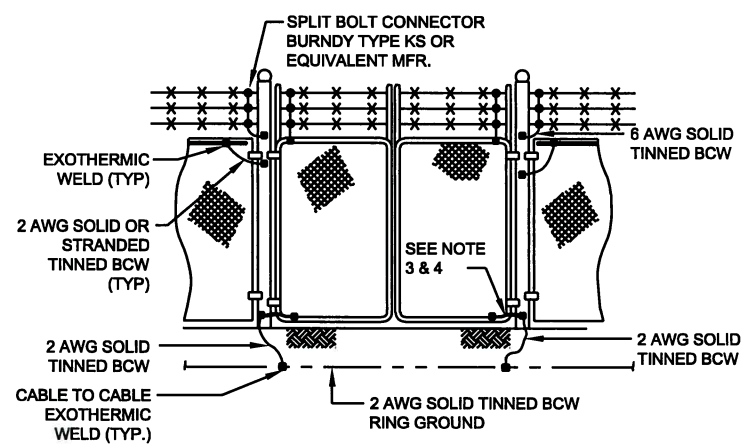

NOTES:

1. WELD THE 2 AWG, BCW, FROM THE RING GROUND TO THE POST ABOVE GRADE.
2. BOND EACH HORIZONTAL POLE/BRACE TO EACH OTHER AND TO EACH VERTICAL POLE BONDED TO THE EXTERIOR GROUND RING.
3. GATE JUMPER SHALL BE 4/0 AWG WELDING CABLE OR FLEXIBLE COPPER BRAID BURNDY TYPE B OR EQUIVALENT MFR. WITH SLEEVES ON EACH END DESIGNED FOR EXOTHERMIC WELDING.
4. GATE JUMPER SHALL BE INSTALLED SO THAT IT WILL NOT BE SUBJECTED TO DAMAGING STRAIN WHEN GATE IS FULLY OPEN IN EITHER DIRECTION.
5. VERTICAL POSTS SHALL BE BONDED TO THE RING AT EACH CORNER AND AT EACH GATE POST.
6. METAL FENCE POSTS WITHIN 7 FEET OF THE BURIED GROUND RING SHALL BE BONDED DIRECTLY TO THE GROUND RING AT 25 FOOT INTERVALS.

FENCE AND GATE GROUNDING DETAIL

DETAIL 5 / – NTS

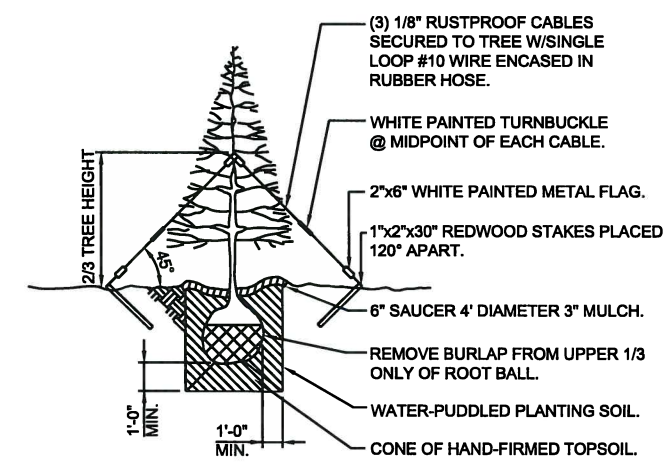

PLANT MATERIALS LIST

QTY.	BOTANICAL NAME	COMMON NAME	SIZE	ROOT	COMMENTS
TBD	THUJA OCCLDENTALIS	EMERALD GREEN ARBORVITAE	4'-0"	BB	10' ℄ TO ℄ W/ 5' OFFSET

TREE PLANTING DETAIL

DETAIL 6 / – NTS

GEORGIA REGISTERED No. PE039564 PROFESSIONAL ENGINEER DENA G. MORGAN
8-14-15

BECHTEL INFRASTRUCTURE AND POWER CORPORATION
2400 HERODIAN WAY
SMYRNA, GA 30080
770-779-1855

FIBER HUT
ATL114
NORTH COOPER LAKE PARK
SMYRNA, GA 30082, USA

HUT ATL114

NO.	DATE	REVISIONS	BY	CHK	SUPV	APP'D
00A	08/13/15	ISSUED FOR PERMIT	NTM	SVR	DM	DM

SCALE: AS SHOWN | DESIGNED BY: SB | DRAWN BY: SB

HUT ATL114

DETAILS

	DRAWING NUMBER	REV
25927-230	H0114-00000-HL-00107	000

22 x 34 'D' SIZE

PSC= : :

CHECK LOCAL CODES FOR BARBED WIRE REQUIREMENTS.

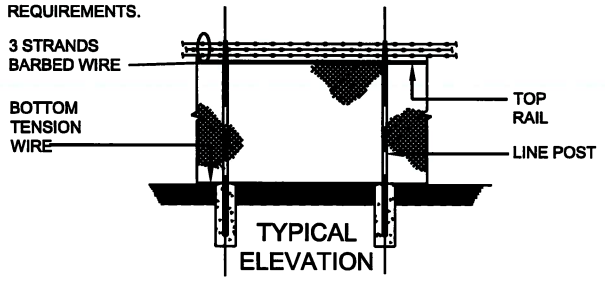

TYPICAL ELEVATION

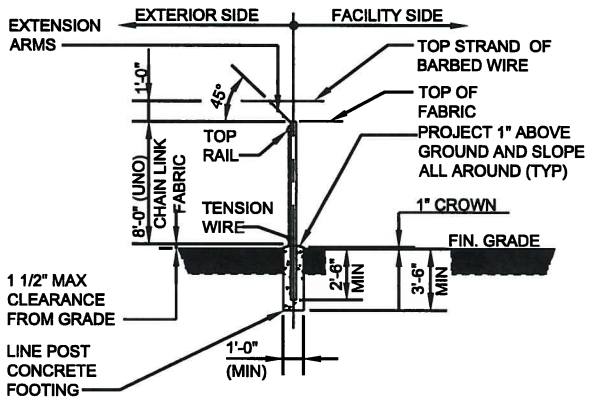

TYPICAL SECTION WOVEN WIRE FENCE

(INSTALL FENCING PER ASTM F-567, SWING GATES PER ASTM F- 900)

DETAIL 4 / NTS

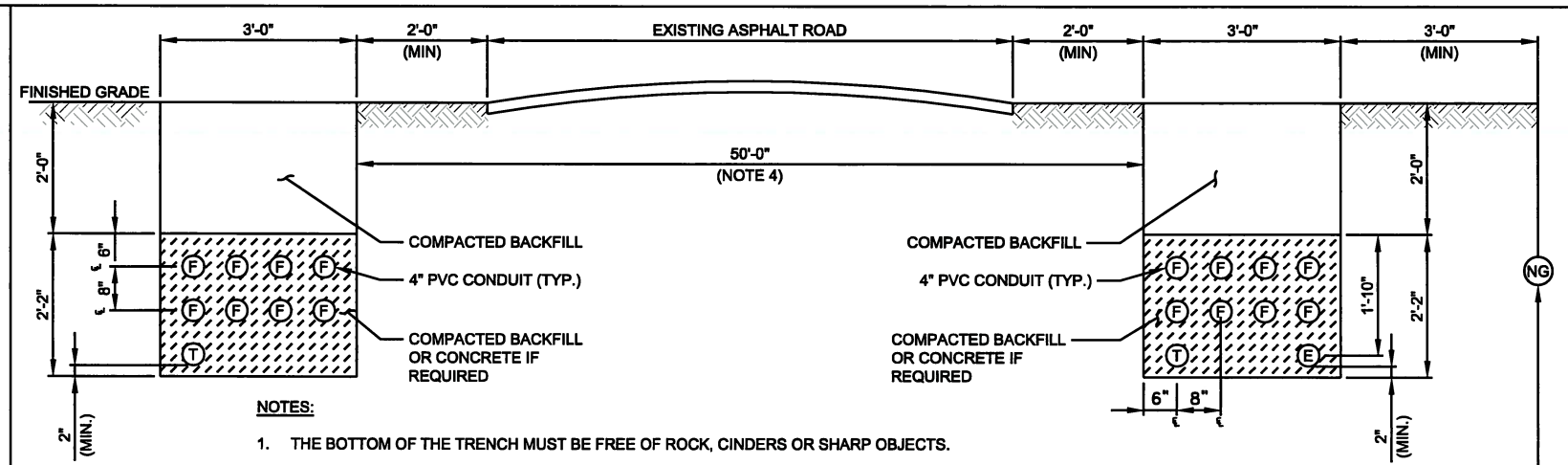

NOTES:

1. THE BOTTOM OF THE TRENCH MUST BE FREE OF ROCK, CINDERS OR SHARP OBJECTS.
2. THE BACKFILLED TRENCH SHALL BE FREE OF PEAT, MARL, HIGHLY PLASTIC CLAY (CH PER ASTM D-2487), OR OTHER UNSUITABLE MATERIAL SUCH AS TRASH, DEBRIS, BRUSH, FROZEN MATERIAL OR ICE.
3. PLACE FINAL BACKFILL ZONE MATERIAL IN 6-INCH LIFTS AND COMPACT WITH MULTIPLE PASSES OF A MACHINE TAMPER, ROLLER, OR VIBRATORY EQUIPMENT (FOR USE ON SAND AND GRAVEL ONLY) THAT IS SPECIFICALLY DESIGNED FOR SOIL COMPACTION. COMPACT UNTIL VOIDS ARE ELIMINATED AND THE COMPACTED SURFACE NO LONGER VISIBLY YIELDS BENEATH THE COMPACTION EQUIPMENT.
4. WHERE 50'-0" INNER EDGE TO INNER EDGE OF TRENCH CANNOT BE MAINTAINED, CONDUIT SHALL BE ENCASED IN CONCRETE.

F FIBER OPTIC CABLE
E ELECTRICAL FEEDER(S)
T TELCO
NG NATURAL GAS (BY OTHERS)

TRENCH DETAIL ELECTRIC, TELCO, GAS AND FIBER DUCT BANK

DETAIL 5 / NTS

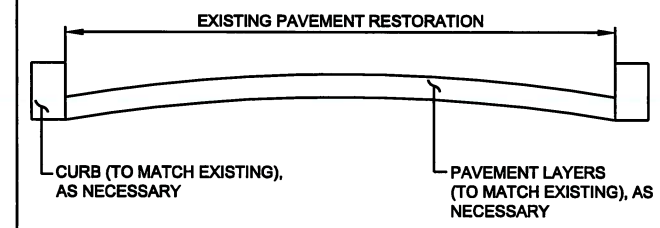

NOTES:

1. EXISTING PAVEMENT AND SIDEWALK SHALL BE REPAIRED/RECONDITIONED TO THEIR ORIGINAL STATE PRIOR TO CONSTRUCTION. ALL MATERIALS USED FOR REPAIR/RECONDITIONING SHALL MATCH EXISTING.

EXISTING PAVEMENT RESTORATION (AS REQUIRED)

DETAIL 6 / NTS

NOTES:

1. GATE POST, CORNER, TERMINAL OR PULL POST SHALL BE 2 7/8"Ø SCHEDULE 40 FOR GATE WIDTHS UP through 6 FEET OR 12 FEET FOR DOUBLE SWING GATE PER ASTM-F1083.
2. LINE POST: 2-3/8"Ø SCHEDULE 40 PIPE PER ASTM-F1083.
3. GATE FRAME: 1 1/2"Ø SCHEDULE 40 PIPE PER ASTM-F1083.
4. TOP RAIL & BRACE RAIL: 1 1/4"Ø SCHEDULE 40 PIPE PER ASTM-F1083.
5. FABRIC: 9 GA. CORE WIRE SIZE 2" MESH, CONFORMING TO ASTM-A392 CLASS 1.
6. TIE WIRE: MINIMUM 11 GA GALVANIZED STEEL INSTALL A SINGLE WRAP TIE WIRE AT POSTS AND RAILS AT MAX. 24" INTERVALS. INSTALL HOG RINGS ON TENSION WIRE AT 24" INTERVALS.
7. TENSION WIRE: 7 GA. GALVANIZED STEEL.
8. BARBED WIRE: DOUBLE STRAND 12-1/2 GAUGE TWISTED WIRE, 4 PT. BARBS SPACED ON APPROXIMATELY 5" CENTERS. (IF USED)
9. GATE LATCH: 1-3/8" O.D. PLUNGER ROD W/ MUSHROOM TYPE CATCH AND LOCK (KEYED ALIKE FOR ALL SITES OR COMBINATION AS SPECIFIED BY OWNER).
10. LOCAL ORDINANCE FOR BARBED WIRE PERMIT SHALL GOVERN INSTALLATION.
11. ALL WORK SHALL CONFORM WITH THE DESIGN AND CONSTRUCTION SPECIFICATIONS FOR FENCES.
12. FENCE AND POST COLOR TO BE PANTONE CODA GREEN #5535

DETAIL 1 / NTS

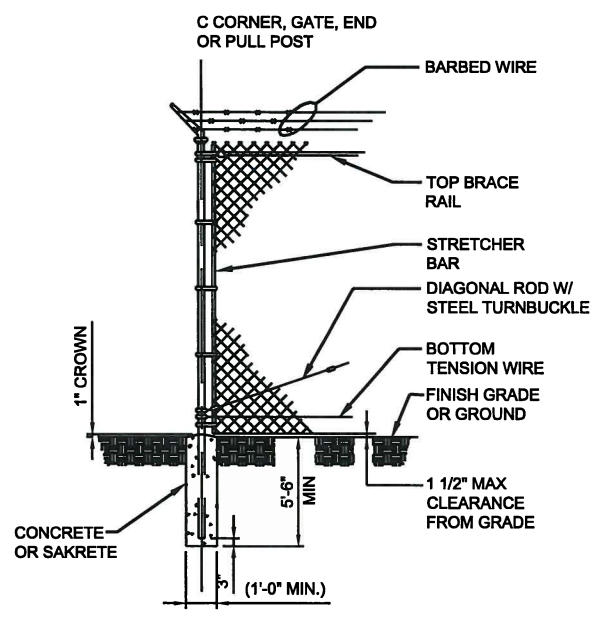

WOVEN WIRE CORNER, GATE, END OR PULL POST

DETAIL 2 / NTS

NOTE:
ROUTINELY INSPECT AND CLEAN OUT GUTTERS AND CATCH BASIN TO REDUCE SEDIMENT LOAD TO INFILTRATION TRENCHES.

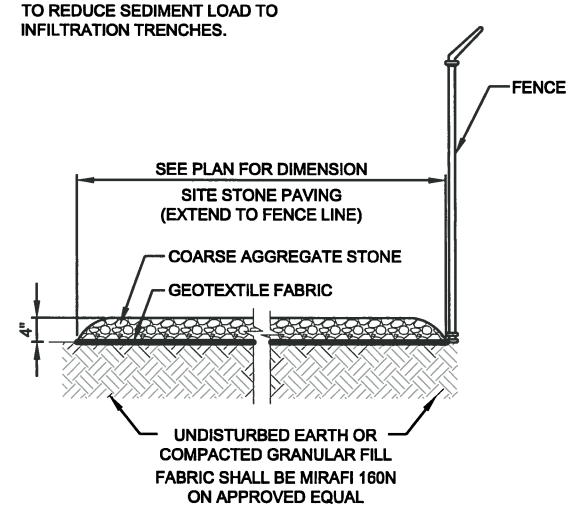

GRAVEL SURFACING

DETAIL 3 / NTS

GEORGIA REGISTERED No. PE039564 PROFESSIONAL ENGINEER DENA G. MORGAN 8-14-15

BECHTEL INFRASTRUCTURE AND POWER CORPORATION
2400 HERODIAN WAY
SMYRNA, GA 30080
770-779-1855

FIBER HUT
ATL114
NORTH COOPER LAKE PARK
SMYRNA, GA 30082, USA

HUT ATL114

NO.	DATE	REVISIONS	BY	CHK	SUPV	APP'D
00A	08/13/15	ISSUED FOR PERMIT	NTM	SVR	DM	DM

SCALE: AS SHOWN | DESIGNED BY: SB | DRAWN BY: SB

HUT ATL114

DETAILS

DRAWING NUMBER	REV
25927-230 H0114-00000-HL-00108	000

22 x 34 "D" SIZE

PSC= : :

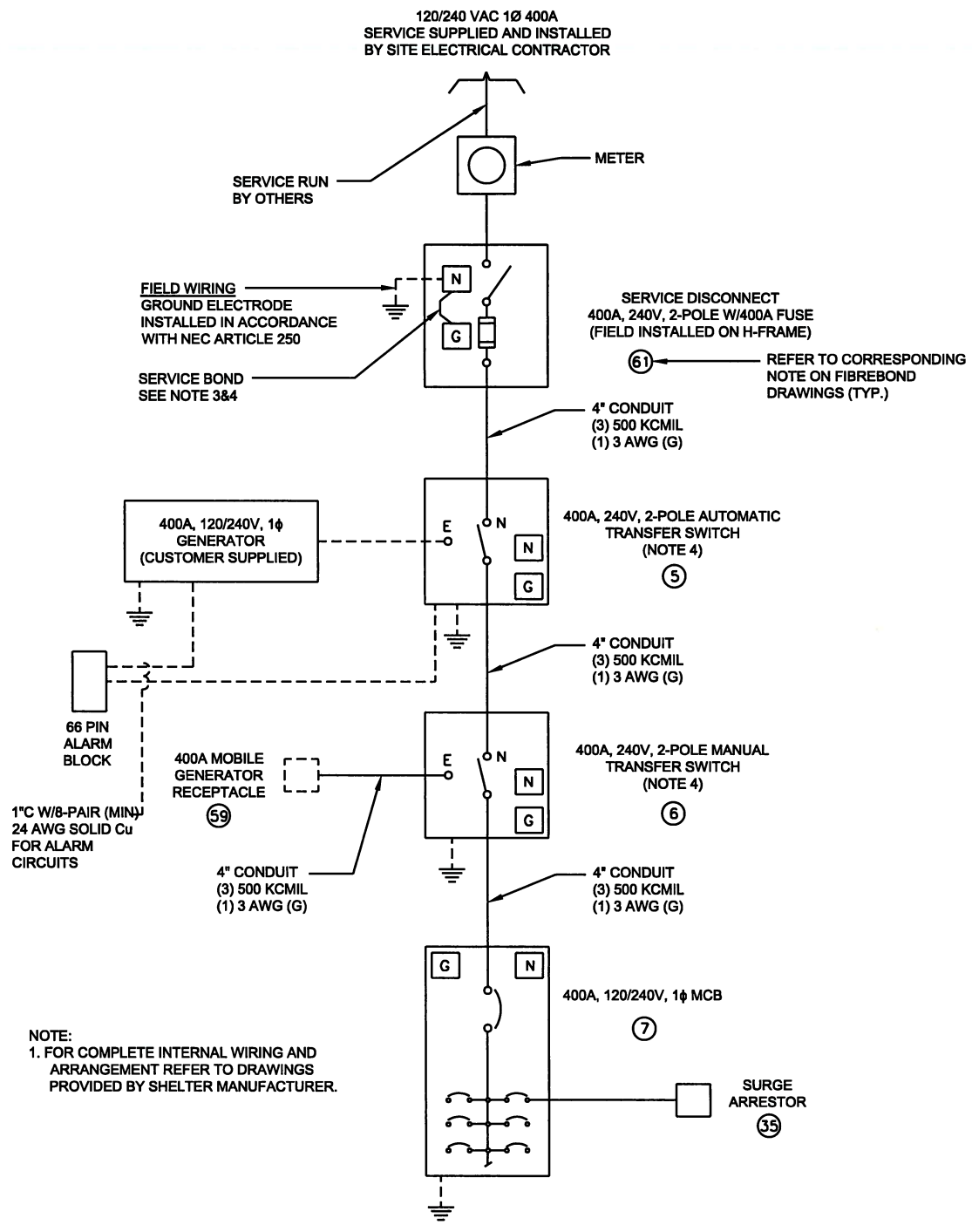

NOTE:
1. FOR COMPLETE INTERNAL WIRING AND ARRANGEMENT REFER TO DRAWINGS PROVIDED BY SHELTER MANUFACTURER.

POWER RISER BLOCK DIAGRAM

NOTES:
1. ——DASHED LINES DENOTE FIELD WORK.
2. BUILDING ELECTRICAL SYSTEM IS RATED AT 10000A.I.C. IF HIGHER RATINGS ARE REQUIRED, IT IS THE RESPONSIBILITY OF SITE CONTRACTOR/ENGINEER TO MEET SUCH REQUIREMENTS.
3. SERVICE BOND IS TO BE MADE BY DEVICES (STRAPS, SCREWS, ETC.) SUPPLIED BY EQUIPMENT MANUFACTURER. IF NO SUCH DEVICE IS SUPPLIED, BOND IS TO BE MADE IN ACCORDANCE WITH NEC ARTICLE 250.
4. WHEN SERVICE OVERCURRENT DISCONNECT IS FIELD INSTALLED AND HAS A NEUTRAL TO GROUND CONNECTION ESTABLISHED, REMOVE NEUTRAL TO GROUND CONNECTION IN TRANSFER SWITCH.
5. CONDUCTOR OVERCURRENT PROTECTION DEVICES ARE SELECTED IN ACCORDANCE WITH NEC (ARTICLE 240.3).
6. CONDUCTOR SIZING IS SELECTED FROM NEC (ARTICLE 215.2).
7. ALL LUGS THAT HOLD MORE THAN ONE WIRE SHALL BE LISTED FOR MULTI-BARREL CONNECTIONS.
8. ALL CONDUCTORS SHALL BE COPPER, WITH TYPE THHN OR THWN INSULATION.
9. LABEL SERVICE DISCONNECT WITH A RED TAG.
10. RECOMMEND SERVICE ENTRANCE CONDUCTOR SIZE: (3) 500 kCMIL & (1) #3 GROUND.

GEORGIA REGISTERED No. PE039564 PROFESSIONAL ENGINEER DENA G. MORGAN
8-14-15

BECHTEL INFRASTRUCTURE AND POWER CORPORATION
2400 HERODIAN WAY
SMYRNA, GA 30080
770-779-1855

FIBER HUT
ATL114
NORTH COOPER LAKE PARK
SMYRNA, GA 30082, USA

HUT ATL114

NO.	DATE	REVISIONS	BY	CHK	SUPV	APP'D
00A	08/13/15	ISSUED FOR PERMIT	NTM	SVR	DM	DM

SCALE: AS SHOWN | DESIGNED BY: SB | DRAWN BY: SB

HUT ATL114

POWER RISER BLOCK DIAGRAM

DRAWING NUMBER		REV
25927-230	H0114-00000-HL-00109	000

22 x 34 "D" SIZE
PSC= : :

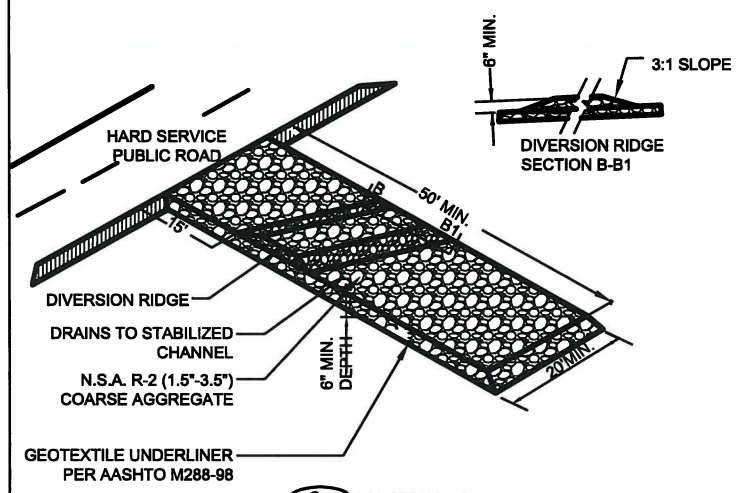

Co CONSTRUCTION EXIT

CONSTRUCTION EXIT
A STONE STABILIZED PAD SHALL BE LOCATED AT ANY POINT WHERE TRAFFIC WILL BE LEAVING A CONSTRUCTION SITE TO A PUBLIC RIGHT-OF-WAY, STREET, ALLEY, SIDEWALK, PARKING AREA, OR ANY OTHER AREA WHERE THERE IS A TRANSITION FROM BARE SOIL TO A PAVED AREA.

AGGREGATE SIZE
STONE WILL BE IN ACCORDANCE WITH NATIONAL STONE ASSOCIATION R-2 (1.5 TO 3.5 INCH STONE).

PAD THICKNESS
THE GRAVEL PAD SHALL HAVE A MINIMUM THICKNESS OF 6 INCHES.

PAD WIDTH
AT A MINIMUM, THE WIDTH SHOULD EQUAL FULL WIDTH OF ALL POINTS OF VEHICULAR EGRESS, BUT NOT LESS THAN 20 FEET WIDE.

DIVERSION RIDGE
ON SITES WHERE THE GRADE TOWARD THE PAVED AREA IS GREATER THAN 2%, A DIVERSION RIDGE 6 TO 8 INCHES HIGH WITH 3:1 SIDE SLOPES SHALL BE CONSTRUCTED ACROSS THE FOUNDATION APPROXIMATELY 15 FEET ABOVE THE ROAD.

MAINTENANCE
THE EXIT SHALL BE MAINTAINED IN A CONDITION WHICH WILL PREVENT TRACKING OR FLOW OF MUD ONTO PUBLIC RIGHTS-OF-WAY. THIS MAY REQUIRE PERIODIC TOP DRESSING WITH 1.5-3.5 INCH STONE, AS CONDITIONS DEMAND, AND REPAIR AND/OR CLEANOUT OF ANY STRUCTURES TO TRAP SEDIMENT. ALL MATERIALS SPILLED, DROPPED, WASHED, OR TRACKED FROM VEHICLES OR SITE ONTO ROADWAYS OR INTO STORM DRAINS MUST BE REMOVED IMMEDIATELY.

DETAIL 1/108
NTS

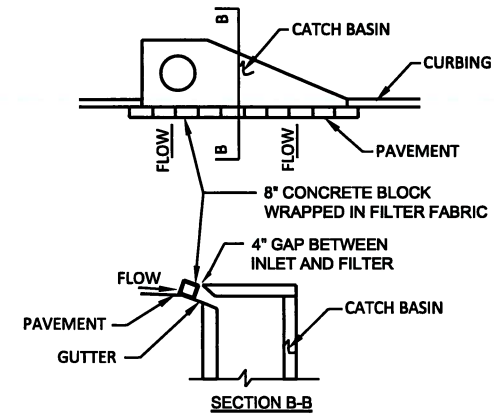

CURB INLET PROTECTION
ONCE PAVEMENT HAS BEEN INSTALLED, A CURB INLET FILTER SHALL BE INSTALLED ON INLETS RECEIVING RUNOFF FROM DISTURBED AREAS. THIS METHOD OF INLET PROTECTION SHALL BE REMOVED IF A SAFETY HAZARD IS CREATED.

ONE METHOD OF CURB INLET PROTECTION USES "PIGS-IN-A-BALNKET": 8-INCH CONCRETE BLOCKS WRAPPED IN FILTER FABRIC. SEE DETAIL. ANOTHER METHOD USES GRAVEL BAGS CONSTRUCTED BY WRAPPING DOT #57 STONE WITH FILTER FABRIC, WIRE, PLASTIC MESH, OR EQUIVALENT MATERIAL. A GAP OF APPROXIMATELY 4 INCHES SHALL BE LEFT BETWEEN THE INLET FILTER AND THE INLET TO ALLOW FOR OVERFLOW AND PREVENT HAZARDOUS PONDING IN THE ROADWAY. PROPER INSTALLATION AND MAINTENANCE ARE CRUCIAL TO AVOID PONDING IN THE ROADWAY, RESULTING IN A HAZARDOUS CONDITION.

Sd2-P CURB INLET PROTECTION

MAINTENANCE FOR ALL Sd2 APPLICATIONS
ALL TRAPS SHALL BE INSPECTED DAILY AND AFTER EACH RAIN AND REPAIRS MADE AS NEEDED. SEDIMENT SHALL BE REMOVED WHEN THE SEDIMENT HAS ACCUMULATED TO ONE-HALF THE HEIGHT OF THE TRAP. SEDIMENT SHALL BE REMOVED FROM CURB INLET PROTECTION IMMEDIATELY. FOR EXCAVATED INLET SEDIMENT TRAPS, SEDIMENT SHALL BE REMOVED WHEN ONE-HALF OF THE SEDIMENT STORAGE CAPACITY HAS BEEN LOST TO SEDIMENT ACCUMULATION. SOD INLET PROTECTION SHALL BE MAINTAINED AS SPECIFIED IN DS4-DISTURBED AREA STABILIZATION (WITH SODDING).

SEDIMENT SHALL NOT BE WASHED INTO THE INLET. IT SHALL BE REMOVED FROM THE SEDIMENT TRAP AND DISPOSED OF AND STABILIZED SO THAT IT WILL NOT ENTER THE INLET, AGAIN. WHEN THE CONTRIBUTING DRAINAGE AREA HAS BEEN PERMANENTLY STABILIZED, ALL MATERIALS AND ANY SEDIMENT SHALL BE REMOVED, AND EITHER SALVAGED OR DISPOSED OF PROPERLY. THE DISTURBED AREA SHALL BE BROUGHT TO PROPER GRADE, THEN SMOOTHED AND COMPACTED. ALL DISTURBED AREAS AROUND THE INLET SHALL BE APPROPRIATELY STABILIZED.

DESIGN CRITERIA FOR ALL Sd2 APPLICATIONS MANY SEDIMENT FILTERING DEVICES CAN BE DESIGNED TO SERVE AS TEMPORARY SEDIMENT TRAPS. SEDIMENT TRAPS MUST BE SELF-DRAINING UNLESS THEY ARE OTHERWISE PROTECTED IN AN APPROVED FASHION THAT WILL NOT PRESENT A SAFETY HAZARD. THE AREA DRAINING TO THE INLET SEDIMENT TRAP SHALL BE NO GREATER THAN ONE ACRE.

IF RUNOFF MAY BYPASS THE PROTECTED INLET, A TEMPORARY DIKE SHOULD BE CONSTRUCTED ON THE DOWN SLOPE SIDE OF THE STRUCTURE. ALSO, A STONE FILTER RING MAY BE USED ON THE UP SLOPE SIDE OF THE INLET TO SLOW RUNOFF AND FILTER LARGER SOIL PARTICLES. REFER TO FR-STONE FILTER RING.

DETAIL 2/108
NTS

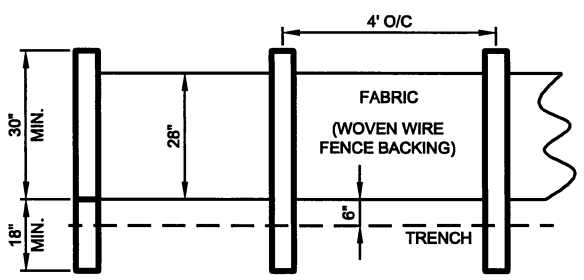

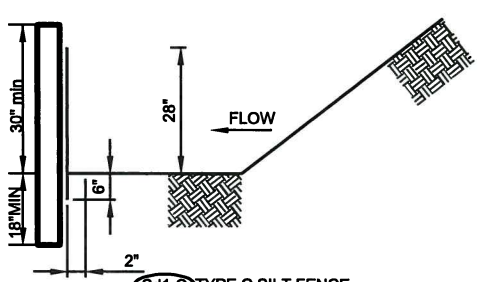

Sd1-C TYPE C SILT FENCE

SILT FENCE
THE MANUFACTURER SHALL HAVE EITHER AN APPROVED COLOR MARK YARN IN THE FABRIC OR LABEL THE FABRICATED SILT FENCE WITH BOTH THE MANUFACTURER AND FABRIC NAME EVERY 100 FEET.

THE TEMPORARY SILT FENCE SHALL BE INSTALLED ACCORDING TO THIS SPECIFICATION, AS SHOWN ON THE PLANS OR AS DIRECTED BY THE ENGINEER. FOR INSTALLATION OF THE FABRIC, SEE DETAIL.
POST INSTALLATION SHALL START AT THE CENTER OF THE LOW POINT (IF APPLICABLE) WITH THE REMAINING POSTS SPACED 4 FEET APART FOR TYPE C SILT FENCE. ONLY STEEL POST SHALL BE USED WITH TYPE C SILT FENCE. POSTS SHALL BE 4' IN LENGTH, 1.3 LBS/ FT.
ALONG STREAM BUFFERS AND OTHER SENSITIVE AREAS, TWO ROWS OF TYPE C SILT FENCE OR ONE ROW OF TYPE C SILT FENCE BACKED BY HAYBALES SHALL BE USED.

MAINTENANCE FOR ALL Sd2 APPLICATIONS
ALL TRAPS SHALL BE INSPECTED DAILY AND AFTER EACH RAIN AND REPAIRS MADE AS NEEDED.
SEDIMENT SHALL BE REMOVED WHEN THE SEDIMENT HAS ACCUMULATED TO ONE-HALF THE HEIGHT OF THE TRAP. SEDIMENT SHALL BE REMOVED FROM CURB INLET PROTECTION IMMEDIATELY. FOR EXCAVATED INLET SEDIMENT TRAPS, SEDIMENT SHALL BE REMOVED WHEN ONE-HALF OF THE SEDIMENT STORAGE CAPACITY HAS BEEN LOST TO SEDIMENT ACCUMULATION. SOD INLET PROTECTION SHALL BE MAINTAINED AS SPECIFIED IN DS4- DISTURBED AREA STABILIZATION (WITH SODDING).

SEDIMENT SHALL NOT BE WASHED INTO THE INLET. IT SHALL BE REMOVED FROM THE SEDIMENT TRAP AND DISPOSED OF AND STABILIZED SO THAT IT WILL NOT ENTER THE INLET, AGAIN.
WHEN THE CONTRIBUTING DRAINAGE AREA HAS BEEN PERMANENTLY STABILIZED, ALL MATERIALS AND ANY SEDIMENT SHALL BE REMOVED, AND EITHER SALVAGED OR DISPOSED OF PROPERLY. THE DISTURBED AREA SHALL BE BROUGHT TO PROPER GRADE, THEN SMOOTHED AND COMPACTED. ALL DISTURBED AREAS AROUND THE INLET SHALL BE APPROPRIATELY STABILIZED.

MAINTENANCE
SEDIMENT SHALL BE REMOVED ONCE IT HAS ACCUMULATED TO ONE-HALF THE ORIGINAL HEIGHT OF THE BARRIER. FILTER FABRIC SHALL BE REPLACED WHENEVER IT HAS DETERIORATED TO SUCH AN EXTENT THAT THE EFFECTIVENESS OF THE FABRIC IS REDUCED (APPROXIMATELY SIX MONTHS). TEMPORARY SEDIMENT BARRIERS SHALL REMAIN IN PLACE UNTIL DISTURBED AREAS HAVE BEEN PERMANENTLY STABILIZED. ALL SEDIMENT ACCUMULATED AT THE BARRIER SHALL BE REMOVED AND PROPERLY DISPOSED OF BEFORE THE BARRIER IS REMOVED.

DESIGN CRITERIA FOR ALL Sd2 APPLICATIONS
MANY SEDIMENT FILTERING DEVICES CAN BE DESIGNED TO SERVE AS TEMPORARY SEDIMENT TRAPS. SEDIMENT TRAPS MUST BE SELF-DRAINING UNLESS THEY ARE OTHERWISE PROTECTED IN AN APPROVED FASHION THAT WILL NOT PRESENT A SAFETY HAZARD. THE AREA DRAINING TO THE INLET SEDIMENT TRAP SHALL BE NO GREATER THAN ONE ACRE.

IF RUNOFF MAY BYPASS THE PROTECTED INLET, A TEMPORARY DIKE SHOULD BE CONSTRUCTED ON THE DOWN SLOPE SIDE OF THE STRUCTURE. ALSO, A STONE FILTER RING MAY BE USED ON THE UP SLOPE SIDE OF THE INLET TO SLOW RUNOFF AND FILTER LARGER SOIL PARTICLES. REFER TO FR-STONE FILTER RING.

DETAIL 3/108
NTS

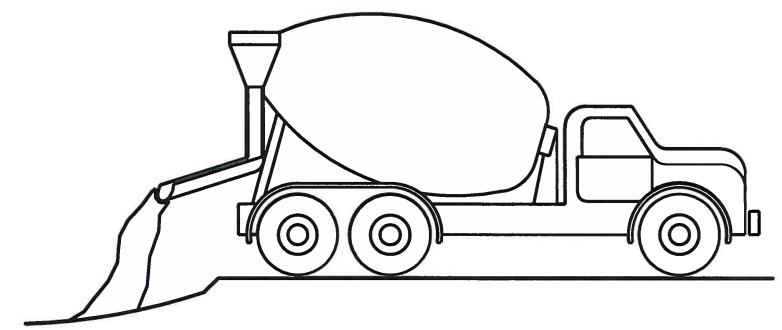

DESIGNATE WASHDOWN AREA AND EXCAVATE PIT LARGE ENOUGH TO CONTAIN WASHDOWN WATER. THIS MUST BE AWAY FROM STORM DRAINS AND WATERWAYS.

ADVISE CONCRETE TRUCK DRIVERS OF THE DESIGNATED WASH-OUT AREAS BEFORE THEY START THE JOB.

WASHDOWN CHUTE, HOPPER, AND REAR OF VEHICLE ONLY. DO NOT WASH OUT DRUM

ENSURE THAT ALL WASHDOWN WATER STAYS IN PIT.

DISPOSE OF SETTLED, HARDENED CONCRETE IN GARBAGE WITH OTHER CONSTRUCTION DEBRIS.

NEVER DISPOSE OF WASHDOWN WATER IN STREETS, STORM DRAINS, OR STREAMS.

CONCRETE TRUCK WASHDOWN

DETAIL 4/108
NTS

GEORGIA REGISTERED No. PE039564 PROFESSIONAL ENGINEER DENA G. MORGAN
8-14-15

BECHTEL INFRASTRUCTURE AND POWER CORPORATION
2400 HERODIAN WAY
SMYRNA, GA 30080
770-779-1855

FIBER HUT
ATL114
NORTH COOPER LAKE PARK
SMYRNA, GA 30082, USA

HUT ATL114

NO.	DATE	REVISIONS	BY	CHK	SUPV	APP'D
00A	08/13/15	ISSUED FOR PERMIT	NTM	SVR	DM	DM

SCALE: AS SHOWN | DESIGNED BY: SB | DRAWN BY: SB

HUT ATL114

EROSION AND SEDIMENT CONTROL DETAILS

	DRAWING NUMBER	REV
25927-230	H0114-00000-HL-00110	000

22 x 34 "D" SIZE
PSC= : :